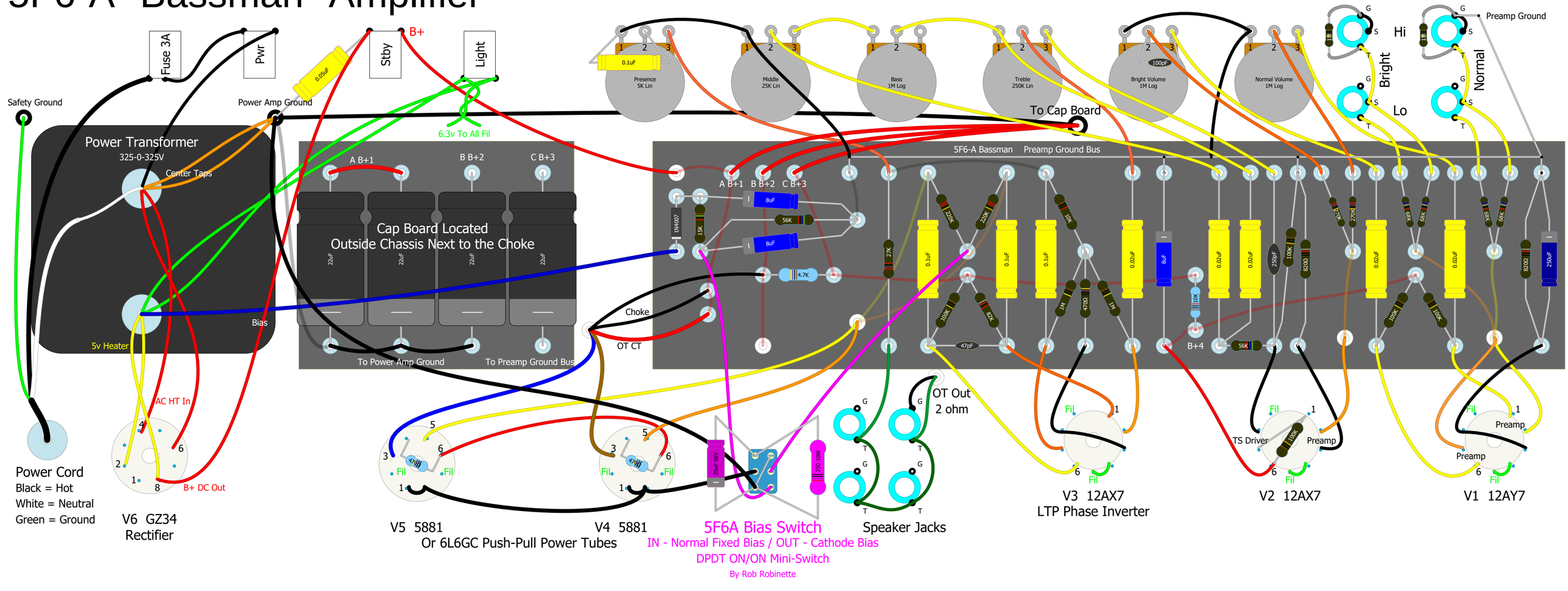5F6-A "Bassman" Amplifier