5F1M "Champ Micro" Layout

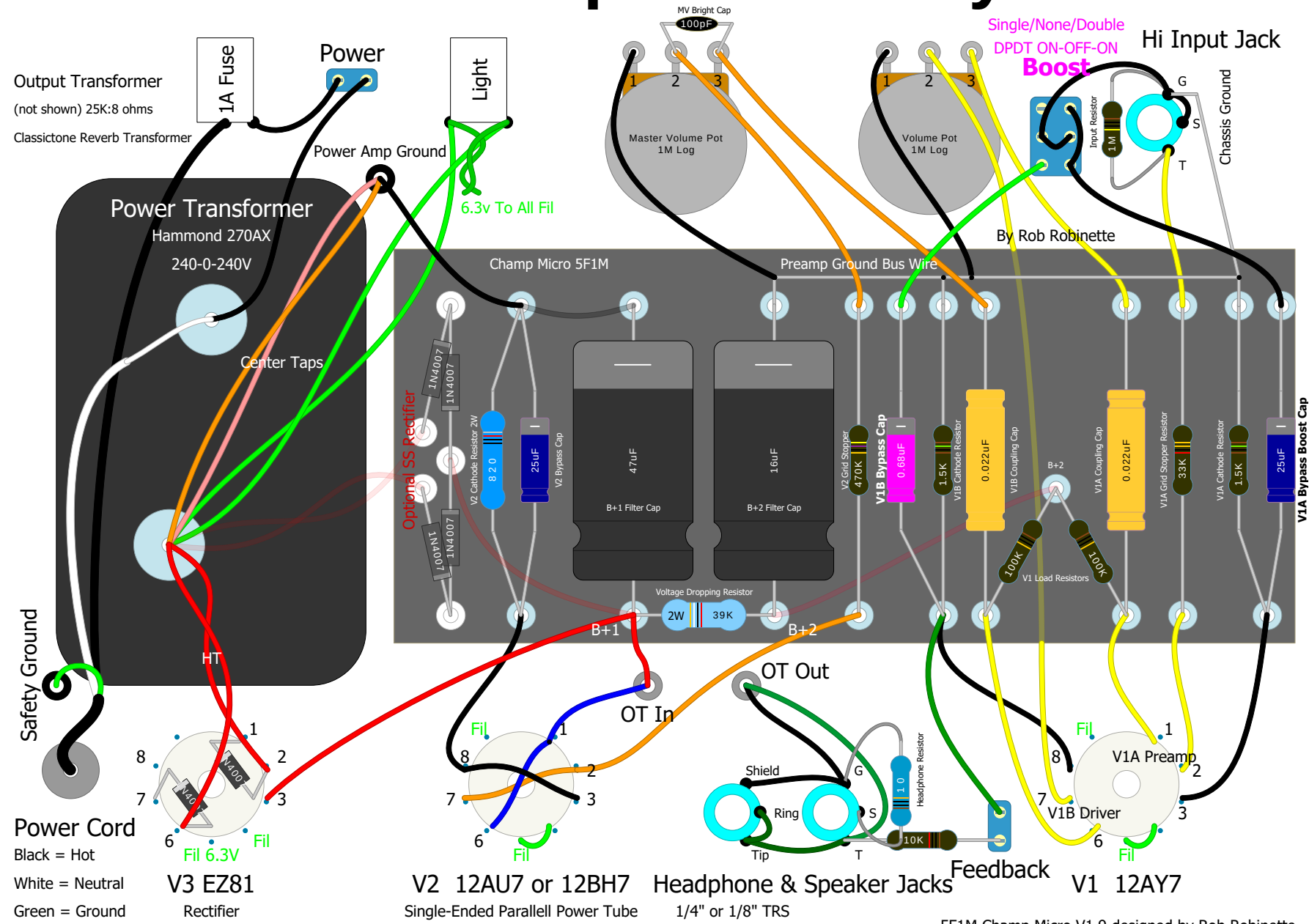

5F1M Champ Micro V1.9 designed by Rob Robinette