5E3M "Deluxe Micro" Layout

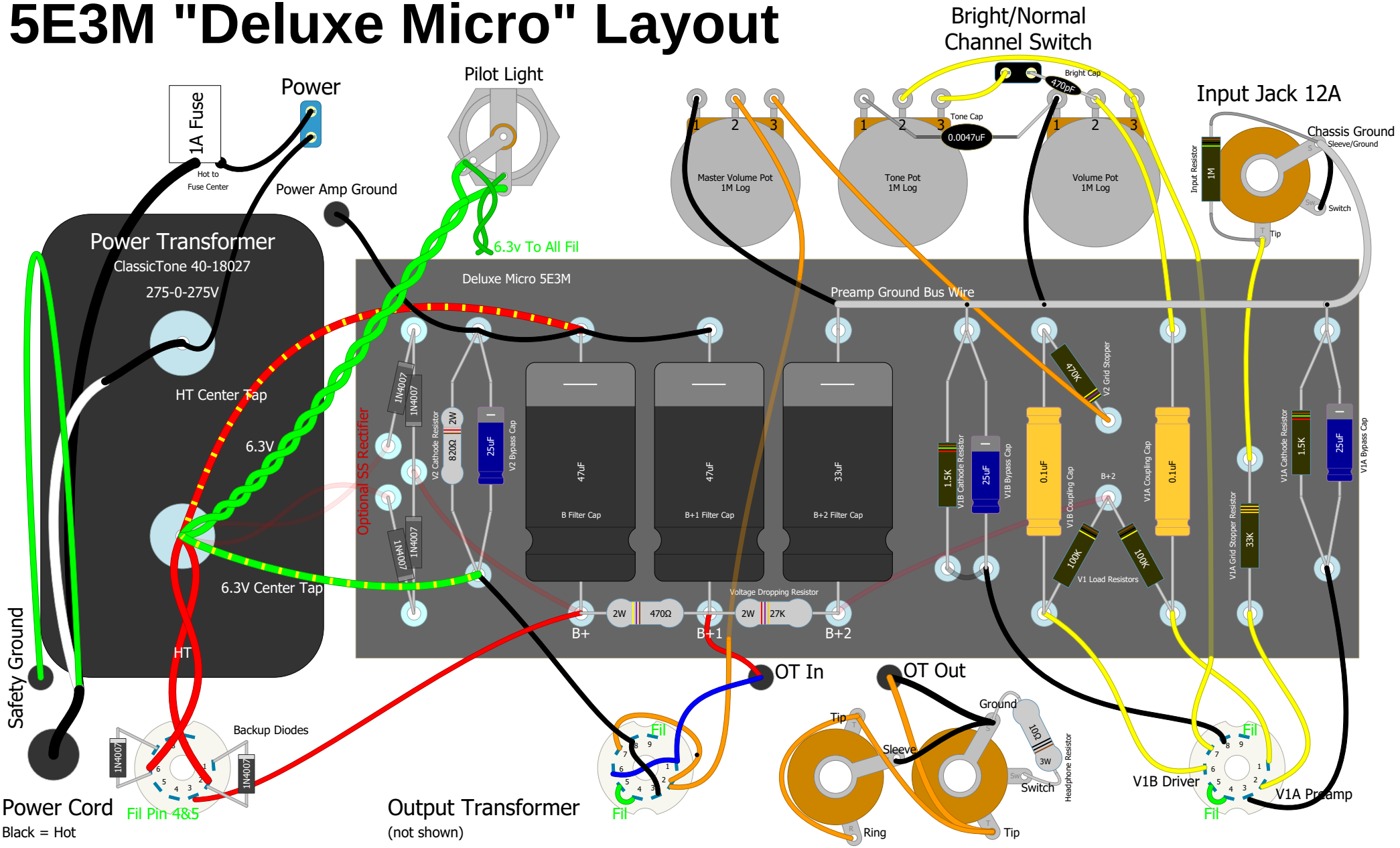

Power Cord

Black = Hot

White = Neutral

Green = Ground

V3 EZ81

Rectifier

Output Transformer

(not shown)

Reverb Transformer

25K:8 ohms

V2 12AU7

Single-Ended Parallell Power Tube

Headphone Jack

1/4" or 1/8" TRS Stereo

Speaker Jack 12A

V1 12AY7

Try a 12AX7 for more dirt

5E3M Deluxe Micro V3.3 designed by RobRobinette.com