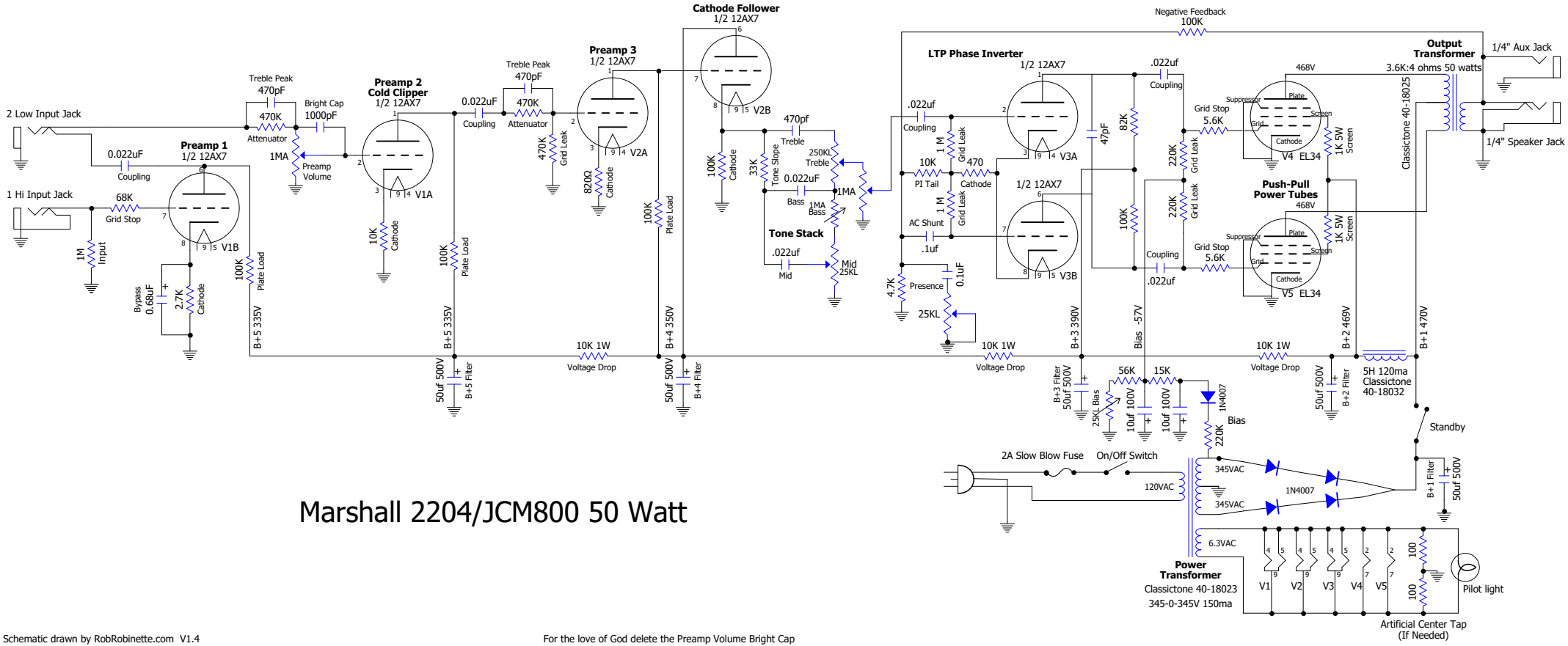

Schematic drawn by RobRobinette.com V1.4

For the love of God delete the Preamp Volume Bright Cap