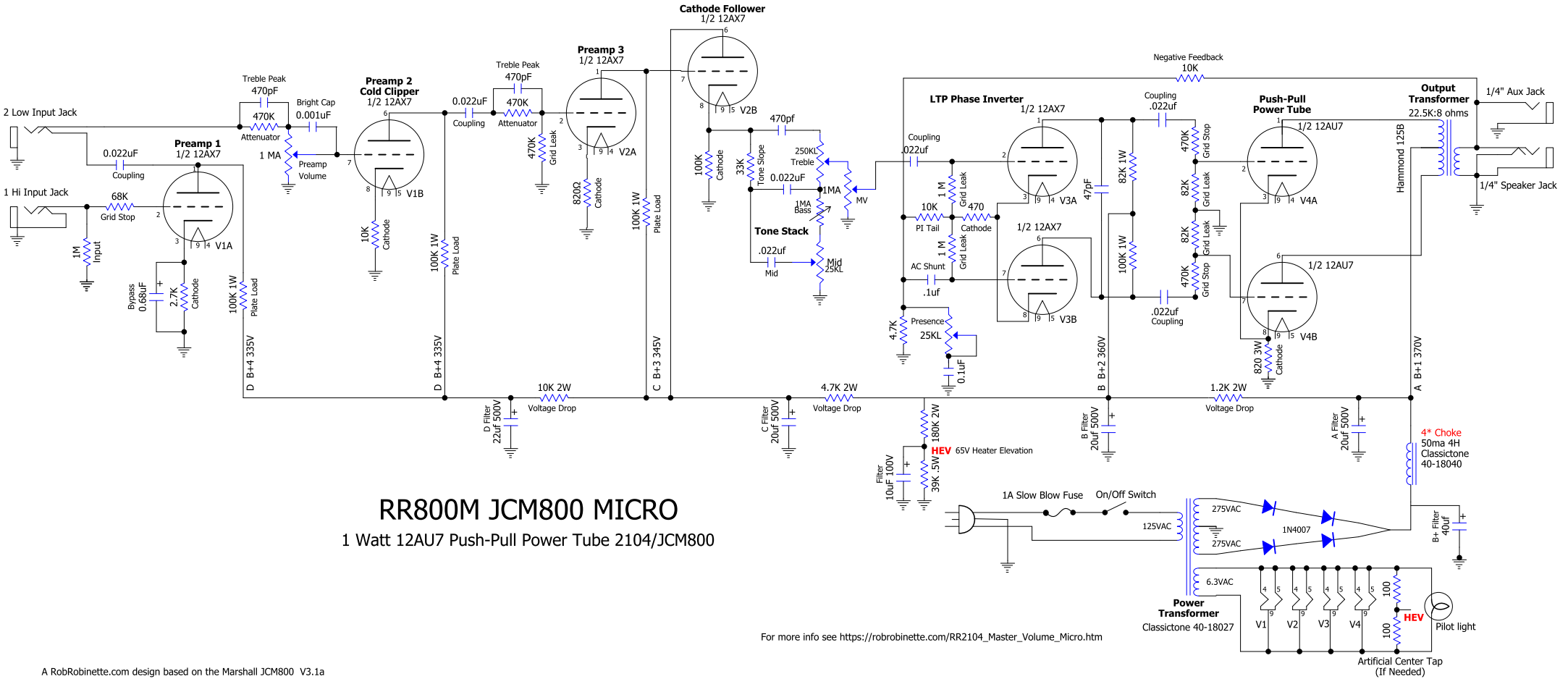

RR800M JCM800 MICRO

1 Watt 12AU7 Push-Pull Power Tube 2104/JCM800

For more info see https://robrobinette.com/RR2104_Master_Volume_Micro.htm

A RobRobinette.com design based on the Marshall JCM800 V3.1a